Caspian Journal of Dental Research
e-ISSN: 2322-2395 p-ISSN: 2251-9890
Babol University Of Medical Sciences

Effect of diameter, length and crown-to-implant ratio on the stress distribution around dental implants: Finite element analysis

Iman Barati [1]✉, Hojatollah Yousefimanesh [2*], Dariush Johari [3]✉

1.Student of Dentistry, Department of Periodontology, School of Dentistry, Ahvaz Jundishapur University of Medical Sciences, Ahvaz, Iran.
2.Assistant Professor, Department of Periodontology, School of Dentistry, Ahvaz Jundishapur University of Medical Sciences, Ahvaz, Iran.
3.Postgraduate Student, Department of Periodontology, School of Dentistry, Ahvaz Jundishapur University of Medical Sciences, Ahvaz, Iran.

Article type
Research Paper

Received: 19 May 2023
Revised: 7 Jul 2023
Accepted: 26 Jul 2023
Pub. online: 19 Aug 2023

ABSTRACT

Introduction: Dental implants are widely used to replace missing teeth. The crown-to-implant ratio is a determinant factor for the survival/success of dental implants. The aim of this study was to investigate the effect of diameter, length, and crown-to-implant ratio on the stress distribution around dental implants using the finite element analysis (FEA) method.

Materials & Methods: In this in vitro study, the cone-beam computed tomography (CBCT) of a patient with an edentulous mandible was used to create a three-dimensional model. The model was uploaded into the Mimics software and the contour model of the mandible was produced. The final file was uploaded into the ABAQUS software for FEA. The mandibular first molar was simulated and reconstructed using six models and in accordance with implant dimensions (diameter: 4.1 and 4.8mm; Length: 6,8,10mm) and axial forces of 200 N and angles of 0°, 15°, 30°, and 45°. The von Mises stress was used to determine the yielding of materials under multifaceted loading from the results of uniaxial tensile tests.

Results: The maximum value of von Mises stress, in all six models was observed in the implant, crown, and cortical and cancellous bones, respectively (491.7, 303.5, 205.8,52 MPa). The highest stress value in all models was observed in the implant neck and the stress levels were decreased towards the apical implant. The stress value around the implant increased with increasing crown-to-implant ratio (69.2, 77.6, 92.9 model <1, 1>1 respectively).

Conclusion: The stress value around the implant increased with increasing crown-to-implant ratio and inclination angle and decreasing diameter and length.

Keywords: Finite Element Analysis, Dental Implants, Mechanical Stress, Jaw

Cite this article: Barati I, Yousefimanesh H, Johari D. Effect of diameter, length and crown-to-implant ratio on the stress distribution around dental implants: Finite element analysis. Caspian J Dent Res 2023; 12: 57-69.

© The Author(s).
Publisher: Babol University of Medical Sciences

* **Corresponding Author:** Hojatollah Yousefimanesh, School of Dentistry, Ahvaz Jundishapur University of Medical Sciences, Ahvaz, Iran.
Tel: +989304874007
E-mail: Hojjatyoosefi@yahoo.com

[Downloaded from cjdr.ir on 2026-11-29]
[DOR: 20.1001.1.22519890.2023.12.2.2.7]
[DOI: 10.22088/cjdr.12.2.57]

Introduction

Missing teeth are the main cause of bone loss and can cause additional complications. Dental implants are used for long-term replacement of missing teeth and prosthetic reconstruction. [1] Alveolar bone resorption can confine the use of implants, e.g., installation of long implants in the mandible area is not possible due to the proximity of the inferior alveolar nerve and limited alveolar ridge height. In the bone reconstruction process, some reconstruction techniques involve nerve replacement or the use of bone blocks which are very difficult and costly techniques, and sometimes they cause problems such as post-operative sensory disturbance and trigeminal nerve injury. [2, 3] The inferior alveolar canal is the main anatomic limitation of the mandible, so placement of short-length implants in the mandible increases the crown-to-implant ratio. [4]

The crown-to-root or implant ratio refers to the physical association between that part of the tooth or implant in the alveolar bone compared with the portion not within the alveolar bone, as assessed by a radiograph. The crown-to-root or implant ratio is ascertained by measurement of the ratio of the length of the tooth or implant coronal to the bone by the length of the root or implant located in the bone. [5] As the crown-to-implant ratio increases, the risk of implant failure and marginal bone loss increase, accordingly. This indicated the effect of biomechanical force distribution on the survival of the implant and mechanical and prosthetic complications.[6]

To avoid overloading to teeth, the minimum crown-to-root ratio of 1:1 is recommended for a prosthetic reconstruction.[7] Several studies have examined the effect of the crown-to-root ratio on the success of implant-supported restorations; however, conflicting results have been reported.[8-12] Due to the ethical and structural complexity of the crown-to-root ratio evaluation, the finite element analysis (FEA) method has been introduced for biomechanical analyses and tackling various complications of conventional methods. The FEA is capable of simulating the pattern of stress distribution and predicting the success of implants in various clinical conditions. [13-15] Additionally, the position, scale, direction of an applied force, and stress points can be determined by the FEA method. The FEA method has many advantages compared with real model studies including accuracy, adjustability, repeatability, and no ethical limitations. [16,17] Since the success of the implant mainly depends on the procedure and implant biomechanical conditions, the aim of this study was to investigate the effect of diameter, length, and crown-to-implant ratio on the stress distribution around dental implants in the posterior mandibular region using the FEA method.

Materials & Methods

In this *in vitro* study approved by the Research Ethics Committee of Ahvaz Jundishapur University of Medical Sciences (Ethics ID: IR.AJUMS.REC.1398.789); a three-dimensional model of a human mandible and analysis was generated using the FEA according to previous study.[18] The cone-beam computed tomography (CBCT) of a patient with an edentulous mandible was obtained. The data sets were uploaded into the Mimics software (Mimics, version 16.0, Materialise, Leuven, Belgium) and the contour model of the mandible was produced, accordingly. The model was imported into the Geomagic Studio software (Version 7.0, Raindrop Geomagic, NC State, USA) to produce a highly accurate 3D polygon model. The output data were then uploaded into the Rapidform (NeoMetrix,LA, USA) software

[Downloaded from cjdr.ir on 2026-11-29]
[DOR: 20.1001.1.22519890.2023.12.2.2.7]
[DOI: 10.22088/cjdr.12.2.57]

to create an editable 3D volume with optimized and non-necessary points and fields as close to the actual construction as possible. The final model was implemented in the ABAQUS® finite element software (Abaqus 2020, Dassault Systemes Simulia Corporation, Velizy Villacoublay, France). The type of D2 bone was simulated based on Lekholm and Zarb classification (a 1-mm-thick cortical bone layer was positioned between the cancellous bone).[18]

ITI implants (Straumann AG, Waldenburg, Switzerland) with diameters of 4.1 and 4.8 mm and lengths of 6, 8, and 10 mm were used to replace the mandibular first molar.[19] Cobalt-chrome metal alloy (Wiron 99; Bego, Bremen, Germany) and porcelain were chosen for the frame and occlusal surface of the crown. The thickness of porcelain and metal used for this study was 0.8 and 2 mm, respectively and the thickness of the cement layer was ignored in this study.[20] The models for crown and implant were designed with an appropriate genus attributed to each of them using the ABAQUS software. Then, the supporting alveolar bone structure (cortical and cancellous bone) obtained from the Mimics software was assembled with a crown and implant obtained from the ABAQUS software (Figure 1).[21]

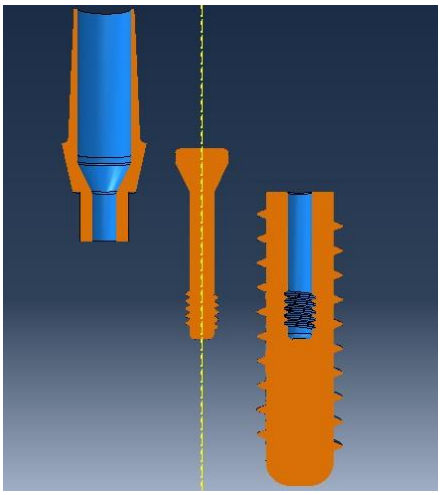

Cross-sectional view of implant components

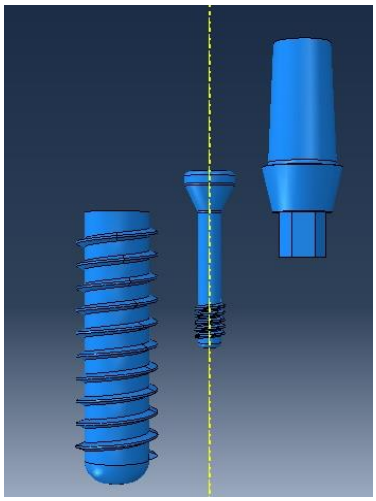

Three-dimensional view of implant components

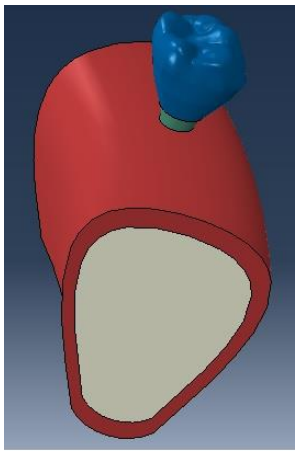

Cortical and cancellous bone section and replacement of implants and prosthetic components

Figure 1. Three-dimensional view of the implant, crown, bone, and implant replacement in the jaw

[Downloaded from cjdr.ir on 2026-11-29]

[DOR: 20.1001.1.22519890.2023.12.2.2.7]
[DOI: 10.22088/cjdr.12.2.57]

Cortical and cancellous bone material properties and prosthetic components were determined according to the previous studies (Table 1). All structural materials were simulated as homogeneous and isotropic structures with linear elastic material behavior.[22] The von Mises stress was used to determine the yielding of materials under multifaceted loading from the results of uniaxial tensile tests.

Table 1. Mechanical properties of the materials

Materials	Elastic modulus (E) (Gpa)	Poisson's ratio (μ)
Titanium (abutment, implant)	110	0.35
Cancellous bone	13.7	0.3
Cortical bone	1.37	0.3
Cobalt-chromium (frameworks)	218	0.33
porcelain (occlusal material)	82.8	0.25

In the bone remodeling process, complete osseointegration was assumed and simulated (presence of 100% contact between bone and implant). The concentrated load was applied at the crown points.[23] A load of 200 N was applied, which was in the range of occlusal normal functional load. The functional force was applied to the buccal cusp at 0,15,30, and 45-degree angles relative to the longitudinal axis of the fixture (Figure 2).[24]

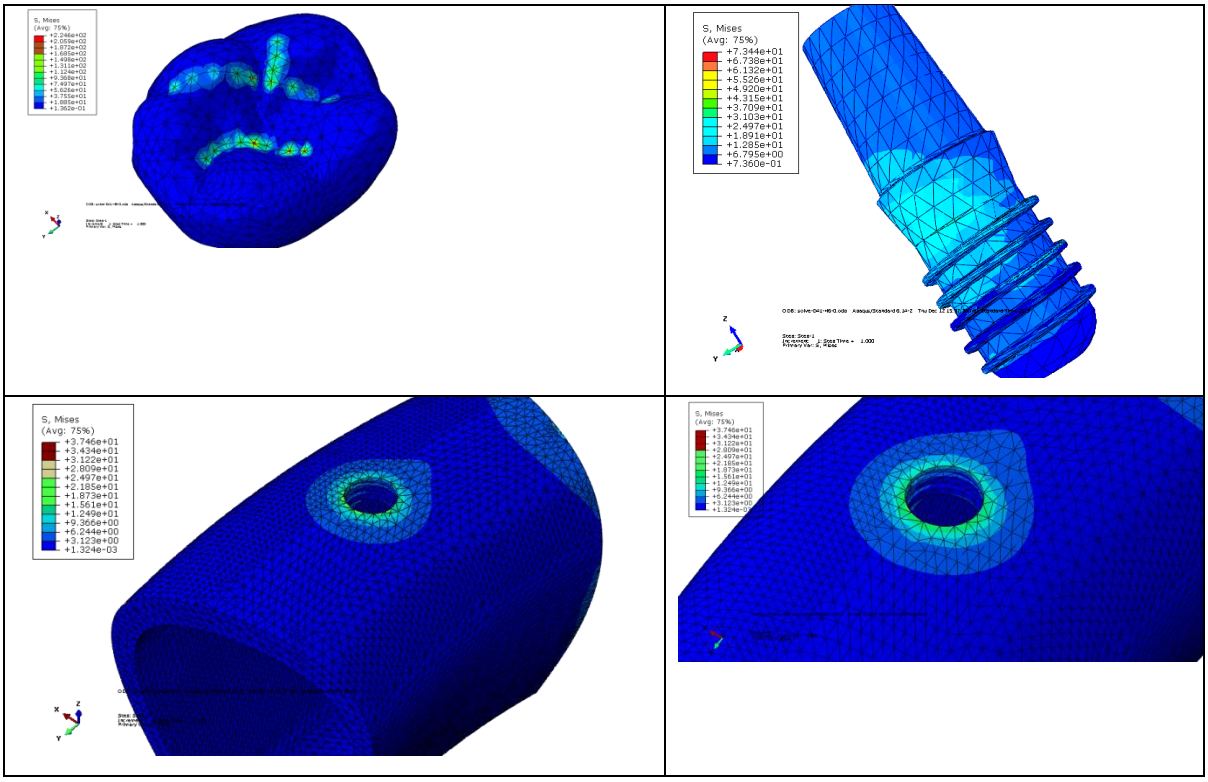

[Downloaded from cjdr.ir on 2026-11-29]
[DOR: 20.1001.1.22519890.2023.12.2.2.7]
[DOI: 10.22088/cjdr.12.2.57]

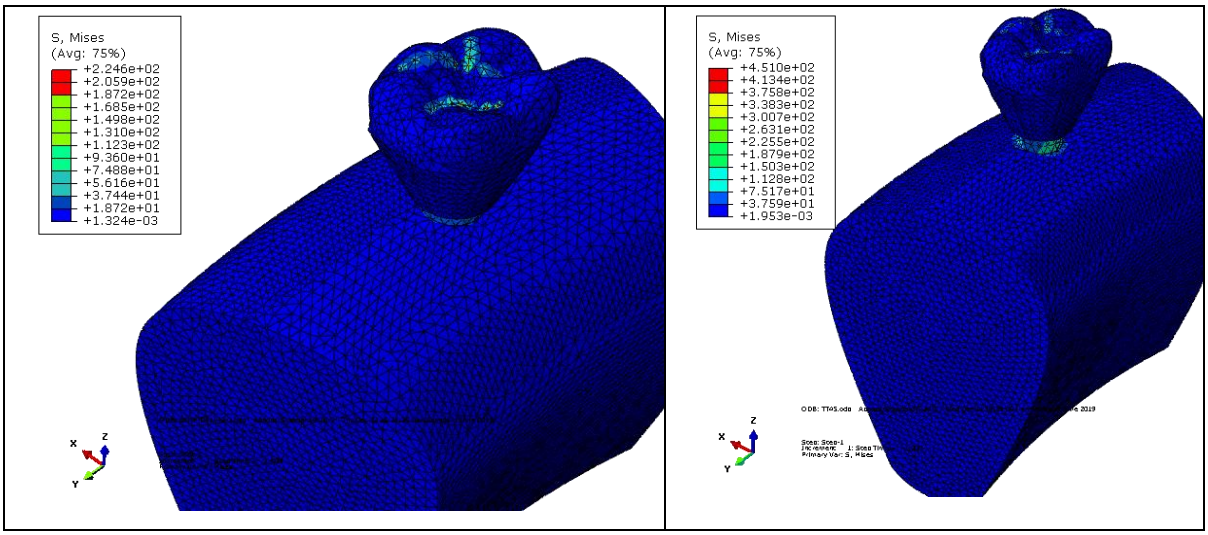

Figure 2. Stress distribution in the component of the studied model (implant, bone, crown)

In this study, the mandibular first molar was simulated and reconstructed using six models and by implant dimensions (implant length and diameter).

Model A1: Implant with 6-mm length and 4.1-mm diameter.

Model A2: Implant with 8-mm length and 4.1-mm diameter.

Model A3: Implant with 10-mm length and 4.1-mm diameter.

Model B1: Implant with 6-mm length and 4.8-mm diameter.

Model B2: Implant with 8-mm length and 4.8-mm diameter.

Model B3: Implant with 10-mm length and 4.8-mm diameter.

In all cases, to evaluate the crown-to-implant ratio, the minimum crown height space (distance from the crestal bone (implant platform) to the occlusal plane) was considered 8 mm. Therefore, A1 and B1 models represented a crown-to-implant ratio of more than one, models A2 and B2 represented a crown-to-implant ratio equal to one, and models A3 and B3 indicated a crown-to-implant ratio of less than one. The von Mises stress (equivalent stress value) was used to determine the yielding of materials under multifaceted loading from the results of uniaxial tensile tests. The length of the crown was same for the all models, and depending on the length of the implant, the ratio of the length of the crown to the implant (<1, 1>1) was calculated.

Results

In the present study, the stress distribution of von Mises was assessed in every six models and around the bone (cortical and cancellous), implant, and prosthesis. The maximum value of von Mises stress at the angle of 0 °, 30°, 15°, and 45° angles, in all six models was observed in the implant, crown, and cortical and cancellous bones, respectively.

Stress distribution around the cortical bone: The results showed that by applying 200-N force at a 0-degree angle relative to the longitudinal axis of the implant, the maximum stress was observed in the crestal bone, buccal region, and to a lesser extent in the lingual region, and much less stress was observed in the mesial and distal regions. Furthermore, when the angle was increased by 15,30, and 45 degrees, the von Mises stress increased, accordingly. The results also showed that the stress value was decreased

[Downloaded from cjdr.ir on 2026-11-29]

[DOR: 20.1001.1.22519890.2023.12.2.2.7]
[DOI: 10.22088/cjdr.12.2.57]

for the cortical bone as the implant diameter decreased, i.e., the stress value of model A for the cortical bone was more than model B (at 0 degrees, A1 vs. B1 models;66.8,33.7 MPa, respectively). As the height of the implant increases, the amount of von Mises stress in the cortical bone decreases (Table 2).

Table 2. Stress distribution by components

Component	Models Degrees	A1	A2	A3	B1	B2	B3
		von Mises stresses (MPa)					
Cortical bone	0	66.8	37.5	26.8	33.7	22	20
	15	125.8	88.9	56.1	77.6	59.8	55.9
	30	159.2	119.4	92.9	94.1	82	80
	45	205.8	154.7	119.3	124.5	102.4	91.9
Cancellous bone	0	19.8	17.7	16.4	16.9	11.8	9.6
	15	32.4	26.6	23.8	23.6	13.3	11.2
	30	43.2	30.4	28	29.7	16.7	12.3
	45	52	41.8	33.1	37.2	28	18.6
Crown	0	270.7	253.9	224.6	250	209.5	177.2
	15	278.6	255.2	226.1	251.1	211.3	180.7
	30	283.5	258.9	228.4	252.5	212.5	190.2
	45	303.5	263.3	237.9	257.5	219.8	197.6
Dental implants	0	295.4	287.6	246.2	273.4	220.4	216.1
	15	319.9	295.7	250.7	287.4	227.2	220.7
	30	360.9	331.9	292.4	301.2	239.7	227.9
	45	491.7	451	396.8	408.5	322.9	305.6

Stress distribution around the cancellous bone: The stress value surrounding the cancellous bone was less than those in the cortical bone around the implant neck. As the length and diameter of the implant increased, the value of von Mises stress in the cancellous bone decreased, accordingly. The results showed a significant association between the stress value and force angle. The stress value around cancellous bone was increased, as the force angle on the implant increased (Table 2).

Stress distribution on the crown: The results showed that by applying 200-N force at 0,15,30, and 45-degree angles relative to the longitudinal axis of the implant, the maximum von Mises stress was observed in the implant and crown, respectively. As the length and diameter of the implant increased, the von Mises stress of the crown of implant-supported prostheses decreased, accordingly (Table 2).

Stress distribution around the dental implants: The results indicated that an increase in the implant length and diameter led to a decrease in the von Mises stress value. The maximum stress value in both models (A and B) was observed around the implant neck and the stress value was reduced towards the apical region. The results also showed that an increase in the angle of force by applying a 200-N force by 0,15,30, and 45 degrees caused a proportional increase in the von Mises stress value, (ie A1 model 295.4,278.6,283.5,303.5 respectively) (Table 2).

Stress distribution in Models A and B(diameter, length, and crown–to–implant ratio): The maximum von Mises stress was observed in the implant compared to the crown, cortical and cancellous bones (Table 1, 2).

[Downloaded from cjdr.ir on 2026-11-29]
[DOR: 20.1001.1.22519890.2023.12.2.2.7]
[DOI: 10.22088/cjdr.12.2.57]

- Comparison of stress distribution in models A and B with the same diameter and different lengths showed that the stress value in implant, crown, cortical and cancellous bones decreased at the same force angle with increasing implant length. The minimum stress value in implant, crown, and cortical and cancellous bones was observed in models A3 among A models and B3 among B models. The minimum stress value was observed in the B3 model.
- Comparison of stress distribution in models A and B with the same length and different diameters showed that the stress value in the implant, crown, cortical and cancellous bones decreased in model B1 compared to model A1, in model B2 compared to model A2, and in model B3 compared to model A3. This indicates that the increase in implant diameter distributes the stress over a larger surface area and decreases the level of stress around the implant, crown, and cortical and cancellous bones).
- A comparison of stress distribution in all studied models showed that as the force angle increased the stress value around the implant, crown, cortical and cancellous bones increased, accordingly. The maximum stress value was observed at a 45-degree angle relative to the longitudinal axis of the implant and the minimum stress value was observed at a 0-degree angle relative to the longitudinal axis of the implant (491.7 Vs 216.1 MPa) (Figure 3).

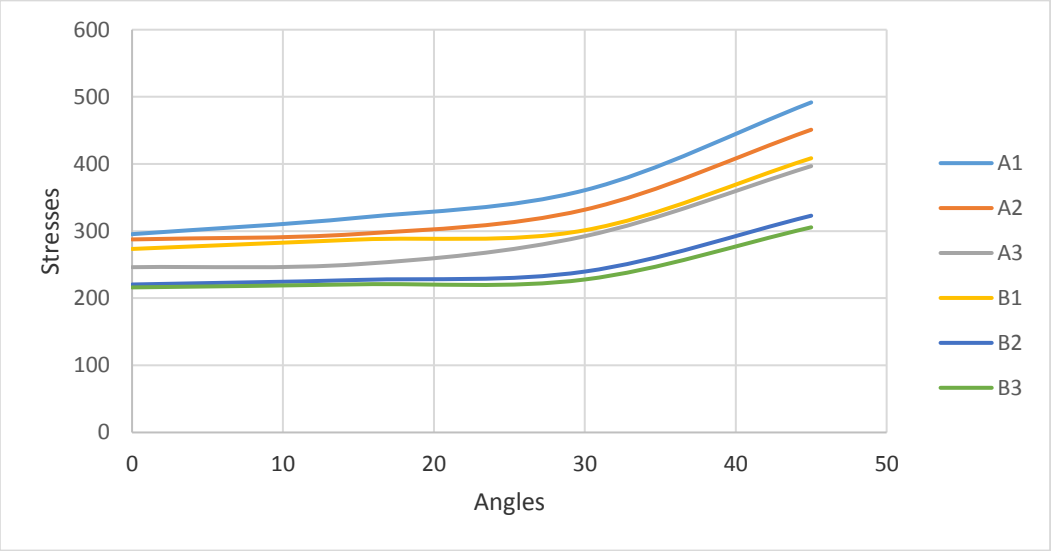

Figure 3. Comparison of stress distribution in the studied models

- The crown-to-implant ratio analysis showed with the increase of crown-to-implant ratio the stress distribution in implant increased, accordingly. The results also demonstrated that the increase in force angle and crown-to-implant ratio led to an increased stress concentration on the implant. In this study, model B had a larger implant diameter compared to Model A, therefore, the stress value of model A was more than model B (Figure 4).
- The schematic diagram analysis of the crown-to-implant ratio trend line showed that the stress value around the implant increased by changing the implant inclination from 0-degree angled to 15-degree angled load was not prominent but from 15-degree angled load to 30-degree angled and from 15-degree angled load to 30-degree angled was prominent. Up to 15 degrees, not much

[Downloaded from cjdr.ir on 2026-11-29]
[DOR: 20.1001.1.22519890.2023.12.2.2.7]
[DOI: 10.22088/cjdr.12.2.57]

stress was applied to the implant, but from 15 to 30 degrees, the stress was more. The inclination changes from 30-degrees to 45-degrees were much greater than the previous angles (Figure 4).

- Comparison of B with A models according to crown-to-implant ratio showed that the ratio changes (less than 1 compare to equivalent 1 ratio) in model B was less than model A (Figure 4).

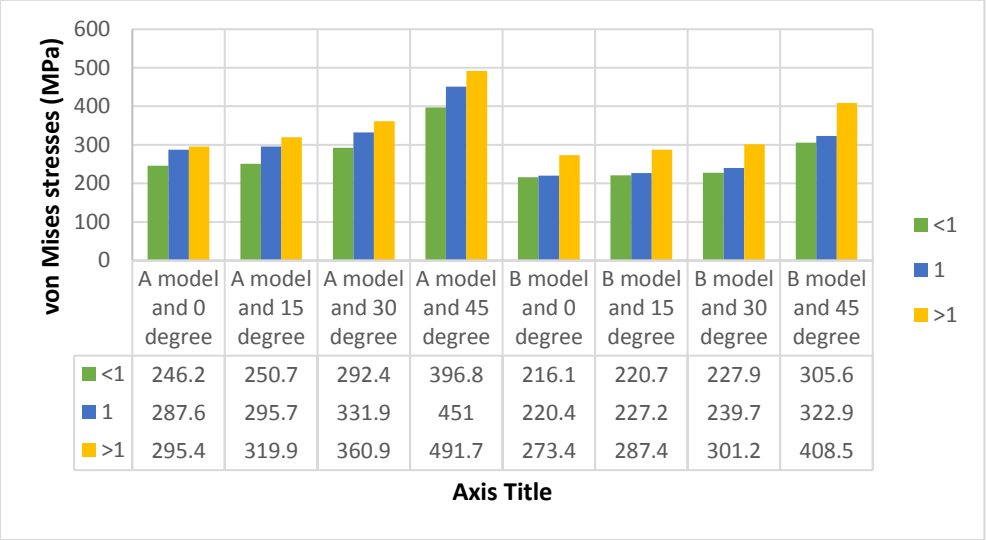

Figure 4. Stress distribution on the implant in different crown-to implant-ratio (<1,1,>1) according to von Mises stress criteria

Discussion

The present study examined the effect of diameter, length, and the crown-to-implant ratio on the stress distribution around dental implants in the posterior mandibular region using the finite elements analysis method. The results showed that the longer implant models were more stable and generated less stress around the implant, crown, cancellous and cortical bones. Furthermore, this study indicated that with the increase of implant diameter and reduction of crown-to-implant ratio the stress value around implant, bone, and crown decreased.

The FEA method is a theoretical technique that can be used as an alternative for clinical studies in which in vivo data collection is impossible or technically questionable.[25] The success of the implant in addition to strong osseointegration depends on biomechanical aspects including the loads applied on the implant directly or through the prosthetic restoration. [26]

In this study, with increasing the crown-to-implant ratio, the level of stress distribution around bone, implant, and prosthesis increased. Okada et al. stated that increasing the crown-to-implant ratio, increased the stress distribution around the implant, and active bone remodelling was detected in a group with a high crown-to-implant ratio, and their results are consistent with the results of the present study.[27]

Some clinical studies suggested that the increased crown-to-implant ratio did not influence the risk of marginal bone resorption.[8,28-31] Birdi et al. suggested that a crown-to-implant ratio of 2.0:1 and even greater can produce a stable favorable outcome.[32] Nevertheless, some studies confirmed the effect of the crown-to-implant ratio on marginal bone loss. Hingsammer et al. stated that the crown-to-implant ratio should not exceed 1.7 and suggested the ratio of 1.7 as a benchmark for clinicians to prevent early marginal bone loss.[33] Similarly, Malchiodi et al. in a 36-month follow-up study, and Garaicoa-Pazmiño

[Downloaded from cjdr.ir on 2026-11-29]
[DOR: 20.1001.1.22519890.2023.12.2.2.7]
[DOI: 10.22088/cjdr.12.2.57]

et al showed that the crown-to-implant ratio influenced the success rate and the level of bone resorption around the implant.[34,35]

The study of de Moraes et al. showed that with increasing the crown-to-implant ratio as well as increasing the angle of force, the level of stress distribution around the bone, implant, and crown increased which may lead to bone resorption. [36] Some studies have stated that increasing the crown-to-implant ratio will increase prosthetic problems. In this study, it was shown that increasing the crown-to-implant ratio increases the tension in the crown, which may increase the prosthetic problems in the crown. [37] The difference in the results of studies about the crown-to-implant ratio and its effects on bone resorption around the implant can be attributed to the type of study (in vitro / in vivo), amount of force at loading, and duration of the study.

The level of stress on the cortical bone and the surface of the implant decreased as the diameter and length of the implant increased which was consistent with the results of previous published studies.[38-40]Implants with a greater diameter and longer length produce better stress distribution, success rates, and prognosis, but the effect of implant diameter change on the stress distribution around bone and implant was more than implant length.[41, 42] The forces are applied at different angles to reconstruct the destructive effects of angled forces. Improper implant positioning can produce an excessive force on bone, implant, and restoration.[43]

The angle of application of force to the longitudinal axis of the implant increased, the amount of von Mises stress increased and the minimum stress was created by the force perpendicular to the bone surface and along the axis of the implant. The application of force perpendicular to the implant is more proportional to the physiological force and causes better transfer of forces to the longitudinal axis of the implant. [44] The application of Off-axis force increased the stress distribution around the cortical bone and the highest stress value was observed in 45-degree oblique force. Additionally, the forces and loading conditions were associated with the stress distribution in bone around the dental implant, i.e., overloading of implants could result in marginal bone resorption and implant failure.[15, 45] Geng et al. indicated that the reason for the increase in force with increasing angle of force is due to the application of more force by the lever arm therefore the point and amount of load application to the cantilever arm influenced the stress distribution around the implant-surrounding bone and prosthetic components.[46]

Papavasiliou et al. examined the stress distribution around the implant and showed that the stress value around the crestal bone of the implant was greater than the apical area in all conditions. [47] Similarly, Hoshaw et al. reported that excessive force to implant increased the concentration of forces on the bone and increased bone resorption around the implant neck and consequently decreased the amount of mineralized cortical tissue.[48] Tada et al. suggested that in low-density bone models, the highest level of stress under axial load was observed in the bone around the implant apex. The reason could be explained due to the lower bone density in this area. [15] El-Anwar et al. stated that when two materials with different coefficients of elasticity were placed together without any intervening material and one of them was loaded, more stress occurred near the point of the first contact. Similarly, they showed that the highest stress value in the contact of implants to the bone was observed in the crestal area of the implant.[49] In the model of low bone density, since the crestal bone region and the other regions have the same density, the stress under the axial forces is distributed to the apical region of the implant, resulting in the stress being concentrated on the crestal region of the implant.

[Downloaded from cjdr.ir on 2026-11-29]
[DOR: 20.1001.1.22519890.2023.12.2.2.7]
[DOI: 10.22088/cjdr.12.2.57]

In this study, the maximum von Mises stress and strain values were observed in the implant, cortical and cancellous bone, respectively. The reason for this could be due to the higher elastic modulus of the implant compared to cortical bone and cancellous bone. Therefore, if the stress is localized at the contact point between the two objects, the stress will be localized in an object with a higher elastic modulus. [50] Since FEA only provides an overall view of biomedical aspects under normal conditions, FEA results should be compared with clinical research. It is recommended to model implants with different sizes and diameters according to the jaw characteristics and evaluate the results with clinical studies if possible.

Conclusion

Implant diameter is an effective parameter for stress reduction compared to implant length. Right-angle implant placement ensures implant stability and prevents extreme angular loading between implant components. Crown-to-implant ratio, diameter, length, and angle of the implant should be considered when planning dental implants.

Acknowledgments

The study was supported by Ahvaz Jundishapur University of Medical Sciences. The authors would like to express their gratitude to the Research and Technology Deputy of Ahvaz Jundishapur University of Medical Sciences. We thank the Engineer of this study “Hossein Robati “for designing and analyzing the software modeling of the project.

Funding

This study was a research project (Grant No: 9645210), supported and funded by Ahvaz Jundishapur University of Medical Sciences.

Conflicts of Interest

The authors certify that they have no conflict of interest.

Author’s Contribution

I. Barati and H Yousefimanesh assisted with Concepts, Experimental studies, Data acquisition, Literature search, Manuscript preparation and Manuscript editing, and Manuscript review. H. Yousefimanesh and D. Johari assisted in the definition of intellectual content, Data acquisition, data analysis, statistical analysis, manuscript preparation, Manuscript editing, and Manuscript review. The manuscript was designed by I. Barati. All authors read and approved the final manuscript.

References

1. de N Dias FJ, Pecorari VGA, Martins CB, Del Fabbro M, Casati MZ. Short implants versus bone augmentation in combination with standard-length implants in posterior atrophic partially edentulous mandibles: systematic review and meta-analysis with the Bayesian approach. Int J Oral Maxillofac Surg 2019;48:90-6.

[Downloaded from cjdr.ir on 2026-11-29]

[DOR: 20.1001.1.22519890.2023.12.2.2.7]

[DOI: 10.22088/cjdr.12.2.57]

2. Amine M, Guelzim Y, Benfaida S, Bennani A, Andoh A. Short implants (5–8 mm) vs. long implants in augmented bone and their impact on peri-implant bone in maxilla and/or mandible: systematic review. J Stomatol Oral Maxillofac Surg. 2019;120:133-42.
3. Pikos MA. Mandibular block autografts for alveolar ridge augmentation. Atlas Oral Maxillofac Surg Clin North Am 2005;13:91-107.
4. da Rocha Ferreira JJ, Machado LFM, Oliveira JM, Ramos JCT. Effect of crown-to-implant ratio and crown height space on marginal bone stress: a finite element analysis. Int J Implant Dent 2021;7:1-5.
5. Blanes RJ, Bernard JP, Blanes ZM, Belser UC. A 10-year prospective study of ITI dental implants placed in the posterior region. II: Influence of the crown-to-implant ratio and different prosthetic treatment modalities on crestal bone loss. Clin Oral Implants Res 2007;18:707-14.
6. Verma A, Singh SV, Arya D, Shivakumar S, Chand P. Mechanical failures of dental implants and supported prostheses: A systematic review. J Oral Biol Craniofac Res 2023; 13:306-14.
7. Hegde V, Acharya S R, Singh GP. Validity of crown-to-root ratio as a prognostic tool in clinical practice. J Evol Med Dent Sci2014;3:15589-99.
8. Urdaneta RA, Rodriguez S, McNeil DC, Weed M, Chuang SK. The effect of increased crown-to-implant ratio on single-tooth locking-taper implants. Int J Oral Maxillofac Implants 2010;25: 729-43.
9. Rossi F, Lang NP, Ricci E, Ferraioli L, Marchetti C, Botticelli D. Early loading of 6-mm-short implants with a moderately rough surface supporting single crowns--a prospective 5-year cohort study. Clin Oral Implants Res 2015;26:471-7.
10. ten Bruggenkate CM, Asikainen P, Foitzik C, Krekeler G, Sutter F. Short (6-mm) nonsubmerged dental implants: results of a Multicenter clinical trial of 1 to 7 years. Int J Oral Maxillofac Implants 1998;13:791-8.
11. Anitua E, Alkhraist MH, Piñas L, Begoña L, Orive G. Implant survival and crestal bone loss around extra-short implants supporting a fixed denture: the effect of crown height space, crown-to-implant ratio, and offset placement of the prosthesis. Int J Oral Maxillofac Implants 2014; 29: 682-9.
12. Nissan J, Ghelfan O, Gross O, Priel I, Gross M, Chaushu G. The effect of crown/implant ratio and crown height space on stress distribution in unsplinted implant supporting restorations. J Oral Maxillofac Surg 2011;69:1934-9.
13. Shivakumar S, Kudagi VS, Talwade P. Applications of finite element analysis in dentistry: A review. J Int Oral Health 2021;13:415.
14. Pirmoradian M, Naeeni HA, Firouzbakht M, Toghraie D, Khabaz MK, Darabi R. Finite element analysis and experimental evaluation on stress distribution and sensitivity of dental implants to assess optimum length and thread pitch. Comput Methods Programs Biomed 2020; 187:105258
15. Tada S, Stegaroiu R, Kitamura E, Miyakawa O, Kusakari H. Influence of implant design and bone quality on stress/strain distribution in bone around implants: a 3-dimensional finite element analysis. Int J Oral Maxillofac Implants 2003;18: 357-68.
16. Weinstein AM, Klawitter JJ, Anand SC, Schuessler R. Stress analysis of porous rooted dental implants. J Dent Res 1976;55:772-7.
17. Trivedi S. Finite element analysis: A boon to dentistry. J Oral Biol Craniofac Res 2014;4:200-3.
18.Zarei M, Jahangirnezhad M, Yousefimanesh H, Robati M, Robati H. A comparative study on the stress distribution around dental implants in three arch form models for replacing six implants using finite element analysis. J Indian Soc Periodontol 2018;22:127-32.
19. Ding X, Liao SH, Zhu XH, Zhang XH, Zhang L. Effect of diameter and length on stress distribution of the alveolar crest around immediate loading implants. Clin Implant Dent Relat Res 2009;11:279-87.
20. Hojjatie B, Anusavice KJ. Three-dimensional finite element analysis of glass-ceramic dental crowns. J Biomech 1990;23:1157-66.
21. Menicucci G, Lorenzetti M, Pera P, Preti G. Mandibular implant-retained overdenture: finite element analysis of two anchorage systems. Int J Oral Maxillofac Implants 1998; 13:369-76.
22. Lewinstein I, Banks-Sills L, Eliasi R. Finite element analysis of a new system (IL) for supporting an implant-retained cantilever prosthesis. Int J Oral Maxillofac Implants 1995;10: 355-66.

[Downloaded from cjdr.ir on 2026-11-29]
[DOR: 20.1001.1.22519890.2023.12.2.2.7]
[DOI: 10.22088/cjdr.12.2.57]

23.Anitua E, Tapia R, Luzuriaga F, Orive G. Influence of implant length, diameter, and geometry on stress distribution: a finite element analysis. Int J Periodontics Restorative Dent 2010;30:89.
24. Vojdani M, Sabouri A, Jafari K, Khajehpour S, Farjoud E. Effectof framework material on stress distribution around implants using three-dimensional finite element analysis. J Dent Sch-Shahid Beheshti Univ Med Sci 2012;30:233-9.
25. Correa S, Ivancik J, Isaza JF, Naranjo M. Evaluation of the structural behavior of three and four implant-supported fixed prosthetic restorations by finite element analysis. J Prosthodont Res 2012;56:110-9.
26. Bulaqi HA, Mousavi Mashhadi M, Safari H, Samandari MM, Geramipanah F. Effect of increased crown height on stress distribution in short dental implant components and their surrounding bone: A finite element analysis. J Prosthet Dent 2015;113:548-57.
27. Okada S, Koretake K, Miyamoto Y, Oue H, Akagawa Y. Increased crown-to-implant ratio may not be a risk factor for dental implant failure under appropriate plaque control. PLoS One 2013; 8:e63992.
28. Blanes RJ. To what extent does the crown–implant ratio affect the survival and complications of implant-supported reconstructions? A systematic review. Clin Oral Implants Res 2009; 20 Suppl 4:67-72.
29. Lee KJ, Kim YG, Park JW, Lee JM, Suh JY. Influence of crown-to-implant ratio on periimplant marginal bone loss in the posterior region: a five-year retrospective study. J Periodontal Implant Sci 2012;42:231.
30. Huang CC, Lan TH, Lee HE, Wang CH. The biomechanical analysis of relative position between implant and alveolar bone: finite element method. J Periodontol 2011; 82:489-96.
31. Malchiodi L, Ricciardi G, Salandini A, Caricasulo R, Cucchi A, Ghensi P. Influence of crown–implant ratio on implant success rate of ultra-short dental implants: results of a 8- to 10-year retrospective study. Clin Oral Investig 2020;24:3213-22.
32. Birdi H, Schulte J, Kovacs A, Weed M, Chuang SK. Crown-to-implant ratios of short-length implants. J Oral Implantol 2010; 36:425-33.
33. Hingsammer L, Watzek G, Pommer B. The influence of crown-to-implant ratio on marginal bone levels around splinted short dental implants: A radiological and clincial short term analysis. Clin Implant Dent Relat Res 2017;19:1090-98.
34. Malchiodi L, Cucchi A, Ghensi P, Consonni D, Nocini PF. Influence of crown–implant ratio on implant success rates and crestal bone levels: A 36-month follow-up prospective study. Clin Oral Implants Res 2014;25:240-51.
35. Garaicoa-Pazmiño C, Suárez-López del Amo F, Monje A, Catena A, Ortega-Oller I, Galindo-Moreno P, et al. Influence of crown/implant ratio on marginal bone loss: a systematic review. J Periodontol 2014;85:1214-21.
36. de Moraes SL, Verri FR, Santiago JF Jr, Almeida DA, de Mello CC, Pellizzer EP. A 3-D finite element study of the influence of crown-implant ratio on stress distribution. Braz Dent J 2013;24:635-41.
37. Urdaneta RA, Rodriguez S, McNeil DC, Weed M, Chuang SK. The effect of increased crown-to-implant ratio on single-tooth locking-taper implants. Int J Oral Maxillofac Implants 2010;25:729-43.
38. Himmlová L, Dostálová T, Kácovský A, Konvicková S. Influence of implant length and diameter on stress distribution: a finite element analysis. J Prosthet Dent 2004;91:20-5.
39. Holmgren EP, Seckinger RJ, Kilgren LM, Mante F. Evaluating Parameters of osseointegrated dental implants using finite element analysis a two-dimensional comparative study examining the effects of implant diameter, implant shape, and load direction. J Oral Implantol 1998; 24:80-8.
40. Bozkaya D, Muftu S, Muftu A. Evaluation of load transfer characteristics of five different implants in compact bone at different load levels by finite elements analysis. J Prosthet Dent 2004;92:523-30.
41. Chun HJ, Shin HS, Han CH, Lee SH. Influence of implant abutment type on stress distribution in bone under various loading conditions using finite element analysis. Int J Oral Maxillofac Implants. 2006;21:195-202.
42. Meijer HJ, Starmans FJ, Steen WH, Bosman F. Loading conditions of endosseous implants in an edentulous human mandible: a three-dimensional, finite-element study. J Oral Rehabil 1996;23:757-63.
43. Pellizzer EP, Falcón-Antenucci RM, de Carvalho PS, Sánchez DM, Rinaldi GA, de Aguirre CC, et al. Influence of implant angulation with different crowns on stress distribution J Craniofac Surg 2011;22:434-7.

[Downloaded from cjdr.ir on 2026-11-29]
[DOR: 20.1001.1.22519890.2023.12.2.2.7]
[DOI: 10.22088/cjdr.12.2.57]

44. Luo SL, Yuan KF, Lai QG, Yang ZJ, Tang XP, Xu X. Study on angle of immediate loading of immediate implant placement. J Craniofac Surg 2015;26:700-5.
45. Hsu ML, Chen FC, Kao HC, Cheng CK. Influence of off-axis loading of an anterior maxillary implant: a 3-dimensional finite element analysis. Int J Oral Maxillofac Implants 2007;22:301-9.
46. Geng JP, Tan KB, Liu GR. Application of finite element analysis in implant dentistry: a review of the literature. J Prosthet Dent 2001;85:585-98.
47. Papavasiliou G, Kamposiora P, Bayne SC, Felton DA. Three-dimensional finite element analysis of stress-distribution around single tooth implants as a function of bony support, prosthesis type, and loading during function. J Prosthet Dent 1996;76:633-40.
48. Hoshaw SJ, Brunski JB, Cochran GV. Mechanical loading of Brånemark implants affects interfacial bone modeling and remodeling. Int. J. Oral Maxillofac. Implants1994;9: 345-60.
49. El-Anwar M, Ghali R, Aboelnagga M. 3D Finite Element Study on: Bar Splinted Implants Supporting Partial Denture in the Reconstructed Mandible. Open Access Maced J Med Sci 2016;4:164-71.
50. Ghanbarzadeh J, Sabooni MR, Keshavarz M. Finite Element Stress Analysis on the Effects of the Changes in Length of Pontic on the Stresses Carried from Pontic to Abutments. J Mashhad Dent Sch 2007;31:231-8. [In Persian].

[Downloaded from cjdr.ir on 2026-11-29]
[DOR: 20.1001.1.22519890.2023.12.2.2.7]
[DOI: 10.22088/cjdr.12.2.57]